TurboTrain™

EQUIPMENT

LOCATION DIAGRAMS

APRIL 1969

MODEL TMT-7 D

© United Aircraft of Canada Limited 1969

PRATT & WHITNEY AIRCRAFT OF CANADA LTD.

TABLE OF CONTENTS

FIGURE	TITLE
1	PDC EQUIPMENT LOCATION – PDC-26 INTERIOR VIEW AND TYPICAL PDC STRUCTURAL VIEW
2	PDC EQUIPMENT LOCATION – PDC-27 INTERIOR VIEW AND AUXILIARY SYSTEMS (HANDBRAKE MECHANISM, DRIVE, PROPULSION, AND FUEL AND OIL EQUIPMENT)
3	PDC EQUIPMENT LOCATION (LEFT-HAND VIEW) – ELECTRICAL, AIR/BRAKE, FIRE PROTECTION AND WATER EQUIPMENT
4	PDC EQUIPMENT LOCATION (RIGHT-HAND VIEW) – ELECTRICAL AND FIRE PROTECTION EQUIPMENT
5	CLIMATIC CONTROL SYSTEM – TYPICAL PDC AND TYPICAL IC
6	IC EQUIPMENT LOCATION – IC-33 INTERIOR VIEW, TYPICAL IC STRUCTURAL VIEW AND SINGLE-AXLE SUSPENSION EQUIPMENT
7	IC EQUIPMENT LOCATION – IC-33 ELECTRICAL, AIR/BRAKE AND WATER EQUIPMENT
8	IC EQUIPMENT LOCATION – IC-35 AND IC-30 INTERIOR VIEW AND ELECTRICAL, AIR/BRAKE AND WATER EQUIPMENT
9	IC EQUIPMENT LOCATION – IC-34 INTERIOR VIEW AND ELECTRICAL, AIR/BRAKE AND WATER EQUIPMENT
10	IC EQUIPMENT LOCATION – IC-31 INTERIOR VIEW AND ELECTRICAL, AIR/BRAKE AND WATER EQUIPMENT

LEGEND FOR FIGURE 1

PDC-26 EQUIPMENT

A	HORN
B	MARKER LIGHTS
C	MASTER CONTROLLER
D	ENGINEMAN'S CAB
E	PARLOR SEAT (TYPICAL)
F	DOME WINDOW (TYPICAL)
G	ENGINE EXHAUST INTAKE STACK
H	EXHAUST OUTLET STACK
I	EMERGENCY LIGHT (TYPICAL)
J	DOME AISLE LIGHT (TYPICAL)
K	LAVATORY AREA
L	PASSENGER'S/CONDUCTOR'S EMERGENCY RELEASE HANDLE
M	CREW AND FOOD SERVICE COMMUNICATION STATION
N	BAGGAGE COMPARTMENT
O	SAFETY LOCKER
P	DELUXE SEAT (TYPICAL)
Q	INNER DIAPHRAGM
R	COACH WINDOW (TYPICAL)
S	AIR INTAKE GRILLE (COACH AIR CONDITIONING)
T	GALLEY AND BAR
U	TOILET DRAIN AND REFILL STATION
V	PASSENGER STEPS (EXTENDED POSITION)
W	CAR IDENTIFICATION SIGN
X	AIR INTAKE GRILLE (ENGINE NO. 3)
Y	FUELING STATION
Z	ENGINE BAY NO. 3 ACCESS PANEL
AA	RIGHT ANGLE GEARBOX BAY ACCESS PANEL
BB	CONTAMINATED FUEL TANK DRAIN COMPARTMENT
CC	ENGINE BAY NO. 4 ACCESS PANEL
DD	FUEL VENT QUICK-DISCONNECT FITTING
EE	AIR INTAKE GRILLE (ENGINE NO. 4)
FF	WAYSIDE ELECTRICAL POWER CONNECTION RECEPTACLE
GG	AIR SPRING COMPARTMENT
HH	DUAL-AXLE TRUCK ASSEMBLY
II	AIR INTAKE GRILLE (DOME AIR CONDITIONING)
JJ	FRONT BAY (AIR CONDITIONING, RADIO AND TURBINE GOVERNOR EQUIPMENT)
KK	SANDING COMPARTMENT
LL	NOSE DOOR MECHANISM COMPARTMENT
MM	AUTOMATIC COUPLER
NN	AUTOMATIC COUPLER ADAPTER
OO	GYRALIGHT
PP	HEADLIGHT
QQ	CLAMSHELL NOSE DOORS

PDC EQUIPMENT LOCATION

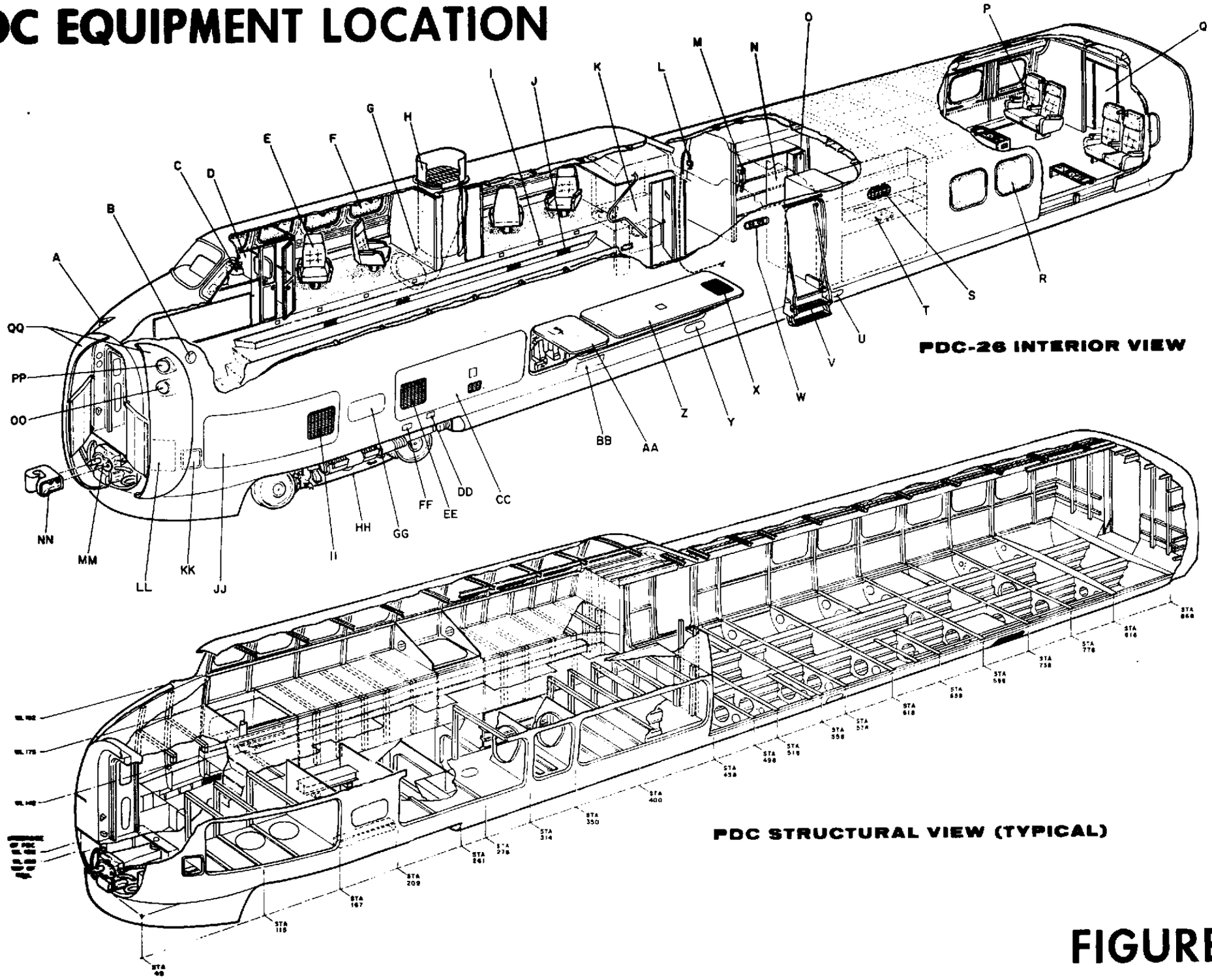

FIGURE 1

LEGEND FOR FIGURE 2

PDC-27 EQUIPMENT

A	HORN
B	MARKER LIGHTS
C	WINDSHIELD (LEFT SIDE)
D	MASTER CONTROLLER
E	ENGINEMAN'S CAB
F	SEAT AND BACK CUSHION (TYPICAL–CLUB BAR)
G	DOME WINDOW (TYPICAL)
H	SERVING TABLE (TYPICAL – CLUB CAR)
I	EXHAUST OUTLET STACK
J	DOME AISLE LIGHT (TYPICAL)
K	EMERGENCY LIGHT (TYPICAL)
L	LAVATORY AREA
M	PASSENGER'S/CONDUCTOR'S EMERGENCY RELEASE HANDLE
N	CREW AND FOOD SERVICE COMMUNICATION STATION
O	BAGGAGE COMPARTMENT
P	SAFETY LOCKER
Q	INNER DIAPHRAGM
R	COACH SEAT (TYPICAL)
S	COACH WINDOW (TYPICAL)
T	AIR INTAKE GRILLE (COACH AIR CONDITIONING)
U	GALLEY AND BAR
V	TOILET DRAIN AND REFILL STATION
W	PASSENGER STEPS (RETRACTED POSITION)
X	CAR IDENTIFICATION SIGN
Y	AIR INTAKE GRILLE (ENGINE BAY NO. 3)
Z	FUELING STATION
AA	ENGINE BAY NO. 3 ACCESS PANEL
BB	CONTAMINATED FUEL TANK DRAIN COMPARTMENT
CC	RIGHT ANGLE GEARBOX BAY
DD	APU BAY ACCESS PANEL
EE	FUEL VENT QUICK-DISCONNECT FITTING
FF	AIR INTAKE GRILLE FOR APU
GG	WAYSIDE ELECTRICAL POWER CONNECTION RECEPTACLE
HH	AIR SPRING COMPARTMENT
II	AIR INTAKE GRILLE (DOME AIR CONDITIONING)
JJ	FRONT BAY (AIR CONDITIONING, RADIO AND TURBINE GOVERNOR EQUIPMENT)
KK	SANDING COMPARTMENT
LL	NOSE DOOR MECHANISM COMPARTMENT
MM	AUTOMATIC COUPLER
NN	GYRALIGHT
OO	HEADLIGHT
PP	CLAMSHELL NOSE DOORS

PROPULSION EQUIPMENT

P1	TRACTION TURBINE ENGINE NO. 1
P2	TRACTION TURBINE ENGINE NO. 2
P3	RIGHT ANGLE GEARBOX
P4	SHIFTING RATCHET MECHANISM
P5	ENGINE EXHAUST ASSEMBLY
P6	APU DRIVE ENGINE
P7	FUEL BOOSTER PUMP ASSEMBLY
P8	FUEL FILTERS
P9	PALL OIL FILTER (RIGHT ANGLE GEARBOX)
P10	MAIN LUBRICATION SYSTEM OIL FILTERS
P11	MAIN OIL QUANTITY GAUGE
P12	MAIN OIL FILLING RECEPTACLE
P13	APU AUXILIARY GEARBOX
P14	AUXILIARY POWER UNIT (APU)
P15	PALL OIL FILTER (APU AUXILIARY GEARBOX)
P16	AUXILIARY LUBRICATION PUMP AND MOTOR

HANDBRAKE MECHANISM

HB1	HANDBRAKE OPERATING HANDLE
HB2	CHAIN LINKAGE (TYPICAL)
HB3	TO BRAKE SHOE ACTUATOR LEVER
HB4	HANDBRAKE RIGGING RELEASE SPRING (TYPICAL)
HB5	FULCRUM LEVERS (TYPICAL)
HB6	LINEAR LEVER (TYPICAL)

DRIVE EQUIPMENT

D1	TRUCK SIDE FRAME
D2	BOLSTER ASSEMBLY
D3	RUBBER BUMPER
D4	LATERAL ARM
D5	AIR SPRINGS
D6	AXLE GEARBOX (REAR)
D7	JACK SHAFT
D8	COLLECTOR GEARBOX
D9	PROPELLER SHAFTS
D10	DRAG LINK
D11	TORSION SPRING ARM
D12	TORSION SPRING BUSHING
D13	BRAKE UNIT
D14	MAGNETIC PICKUP
D15	WHEEL (TYPICAL)
D16	AXLE GEARBOX (FRONT)
D17	AXLE (TYPICAL – DRIVE TRUCK)
D18	WHEEL BEARING HOUSING
D19	SANDING NOZZLE
D20	SAND EJECTOR UNIT

FUEL EQUIPMENT

F1	MAIN FUEL LINE (ENGINES NO. 1 AND NO. 2)
F2	CONTAMINATED FUEL LINE (ENGINES NO. 1 AND NO. 2)
F3	CONTAMINATED FUEL TANK
F4	CENTER FUEL TANK
F5	FLOW CHECK VALVE
F6	SWING CHECK VALVE
F7	FUEL TANK (RIGHT SIDE REAR)
F8	FUEL GAUGING DEVICE (TYPICAL)
F9	FUEL TANK ACCESS COVER (TYPICAL)
F10	FUEL BOOSTER PUMP
F11	FUEL TANK (LEFT SIDE REAR)
F12	FUEL FILLING RECEPTACLE AND FUEL INDICATOR
F13	EMERGENCY STOP (FUELING) BUTTON
F14	CONTAMINATED FUEL LINE (APU ENGINE)
F15	MAIN FUEL LINE (APU ENGINE)
F16	MAIN FUEL FILTERS
F17	CONTAMINATED FUEL DRAIN (TYPICAL)
F18	FUEL TANK (LEFT SIDE FRONT)
F19	FUEL TANK (RIGHT SIDE FRONT)
F20	FLAME ARRESTERS

OIL EQUIPMENT

01	PALL OIL FILTER (APU AUXILIARY GEARBOX)
02	PALL OIL FILTER (RIGHT ANGLE GEARBOX)
03	CUNO OIL FILTERS (MAIN LUBRICATION SYSTEM)
04	OIL QUANTITY GAUGE (MAIN LUBRICATION SYSTEM)
05	MAIN OIL FILLER TUBE
06	AUXILIARY LUBRICATION PUMP
07	MAIN OIL TANK

PDC EQUIPMENT LOCATION

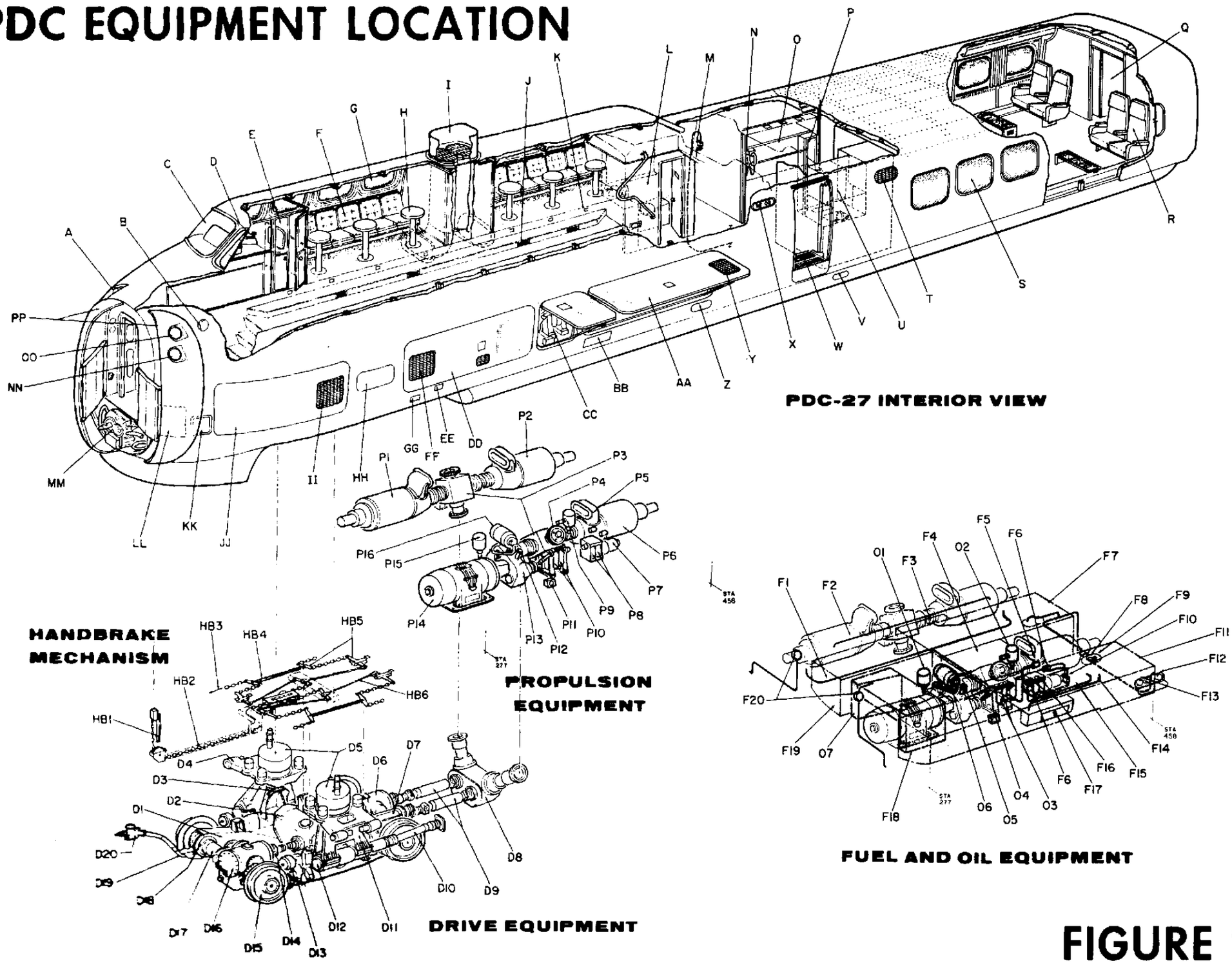

FIGURE 2

LEGEND FOR FIGURE 3

AIR/BRAKE EQUIPMENT

B1	DIAPHRAGM ACTUATORS
B2	DIAPHRAGM ACTUATOR VALVES
B3	AIR COMPRESSOR
B4	HORN
B5	HORN SOLENOID VALVES
B6	HORN CUTOUT COCKS
B7	SANDING SOLENOID VALVE
B8	SLIDE CONTROL GOVERNOR
B9	COMPRESSOR SYNCHRONIZER BOX
B10	MAIN EQUIPMENT DUPLEX CHECK VALVE
B11	SANDING SOLENOID VALVE CUTOUT COCK
B12	AIR SUSPENSION PRESSURE/EPU SIGNAL CAPACITY RESERVOIR CHOKE
B13	EPU MAIN RESERVOIR CUTOUT COCK
B14	EPU BRAKE PIPE CUTOUT COCK (DUAL-AXLE)
B15	AIR STRAINER
B16	EQUALIZING RESERVOIR VENT SOLENOID VALVE CUTOUT COCK
B17	BRAKE CYLINDER CUTOUT COCK
B18	ELECTROPNEUMATIC BRAKE UNIT
B19	EQUALIZING RESERVOIR
B20	EPU BRAKE VALVE MANUAL RELEASE HANDLE (LEFT PDC CAB)
B21	AUXILIARY RESERVOIR
B22	AUTOMATIC DRAIN VALVE
B23	MAIN RESERVOIR
B24	CHECK VALVE
B25	AIR STRAINER
B26	ENGINE START AND CLUTCH AIR SUPPLY CUTOUT COCK
B27	AUXILIARY EQUIPMENT DUPLEX CHECK VALVE
B28	MAIN RESERVOIR PIPE GOVERNOR
B29	BRAKE PIPE GOVERNOR
B30	AUTOMATIC DRAIN VALVE
B31	MAIN RESERVOIR
B32	WATER RAISING SYSTEM CUTOUT COCK
B33	WATER RAISING SYSTEM AIR SUPPLY CHOKE (HIDDEN)
B34	WATER RAISING SYSTEM LIMITING VALVE
B35	WATER RAISING SYSTEM CUTOUT COCK
B36	SAFETY VALVE
B37	CHECK VALVE
B38	BRAKE CYLINDER PRESSURE SWITCH
B39	SLIDE CONTROL GOVERNOR
B40	DRAIN VALVE (SUPPLEMENTARY MAIN RESERVOIR)
B41	SUPPLEMENTARY MAIN RESERVOIR
B42	ELECTROPNEUMATIC BRAKE UNIT (SINGLE-AXLE)
B43	EPU MAIN RESERVOIR CUTOUT COCK
B44	AUXILIARY RESERVOIR (PDC-26 ONLY)
B45	AIR SUSPENSION CUTOUT COCK
B46	BRAKE CYLINDER
B47	AIR SUSPENSION PRESSURE/EPU SIGNAL CAPACITY RESERVOIR CHOKE (HIDDEN)
B48	AIR SUSPENSION PRESSURE/EPU SIGNAL CAPACITY RESERVOIR (SINGLE-AXLE)
B49	AIR SUSPENSION DAMPING RESERVOIR (TYPICAL SINGLE-AXLE)
B50	LEVELING VALVE (SINGLE-AXLE)
B51	AIR SUSPENSION DAMPING RESERVOIR BLEED VALVE (TYPICAL SINGLE-AXLE)
B52	AIR SPRING (SINGLE-AXLE)
B53	BRAKE CYLINDER
B54	INTERCAR MAIN RESERVOIR PIPE CUTOUT COCK
B55	INTERCAR BRAKE PIPE CUTOUT COCK
B56	EPU BRAKE MANUAL RELEASE HANDLE
B57	DRAIN VALVE (AUXILIARY RESERVOIR) (PDC-26 ONLY)
B58	BRAKE CYCLINDER CUTOUT COCK
B59	EPU BRAKE PIPE CUTOUT COCK
B60	BRAKE PIPE DIRT COLLECTOR
B61	WATER RAISING SYSTEM CUTOUT COCK
B62	PASSENGER'S/CONDUCTOR'S EMERGENCY VALVE
B63	BRAKE CYLINDER PRESSURE SWITCH
B64	EQUALIZING RESERVOIR VENT SOLENOID VALVE
B65	BRAKE PIPE DIRT COLLECTOR
B66	RELAY VALVE
B67	LOCKOUT SOLENOID VALVE
B68	BELL
B69	MAIN RESERVOIR PIPE CUTOUT COCK
B70	COUPLER BRAKE PIPE CUTOUT COCK
B71	COUPLER MAIN RESERVOIR PIPE CUTOUT COCK
B72	BELL SOLENOID VALVE
B73	UNCOUPLING SOLENOID VALVE
B74	AIR COMPRESSOR CUTOUT COCK
B75	MAIN RESERVOIR PIPE DIRT COLLECTOR
B76	AIR SUSPENSION DAMPING RESERVOIR BLEED VALVE (DUAL-AXLE)
B77	AIR SUSPENSION DAMPING RESERVOIR "A" (DUAL-AXLE)
B78	AIR SUSPENSION DAMPING RESERVOIR "B" (DUAL-AXLE)
B79	LEVELING VALVE (DUAL-AXLE)
B80	BRAKE CYLINDER
B81	AIR SUSPENSION CUTOUT COCK
B82	AIR SPRING

ELECTRICAL EQUIPMENT

E1	AIR CONDITIONING CONTACTOR PANEL (FORWARD)
E2	HEADLIGHT RESISTOR ASSEMBLY
E3	WINDSHIELD WIPER RESISTOR ASSEMBLY
E4	460 VAC CIRCUIT BREAKER PANEL NO. 2
E5	APU CIRCUIT BREAKER
E6	SERVICE (WAYSIDE POWER) CIRCUIT BREAKER
E7	460 VAC CIRCUIT BREAKER PANEL NO. 3
E8	28 VAC CIRCUIT BREAKER PANEL NO. 6
E9	120 VAC CIRCUIT BREAKER PANEL NO. 4
E10	28 VDC CIRCUIT BREAKER PANEL NO. 5
E11	DOOR CONTROL PANEL
E12	CREW COMMUNICATION STATION
E13	FOOD SERVICE UNIT
E14	PARLOR SECTION AMPLIFIER
E15	TAPE ANNOUNCE UNIT
E16	COACH SECTION AMPLIFIER
E17	TAPED MUSIC UNIT
E18	BRAKE TEST RELAY
E19	ANTI-SLIDE UNIT (PDC-26 ONLY)
E20	FOOD SERVICE COMPRESSOR UNIT (1/3 HP)
E21	6 KVA TRANSFORMER
E22	JUNCTION BOX "C"
E23	JUNCTION BOX "H"
E24	AIR CONDITIONING CONTACTOR PANEL
E25	DOOR AND STEP MECHANISM
E26	1.5 KVA SINGLE PHASE TRANSFORMER
E27	AIR FILTRATE BLOWER AND MOTOR
E28	FUEL HEATER CONTROL
E29	ENGINE STC-1 START/STOP CONTROL PANEL
E30	SOFT-START RESISTOR BOX
E31	OVERHEAD BAY LIGHT
E32	9 KVA THREE PHASE TRANSFORMER
E33	BAY LIGHTING SWITCH
E34	120 VAC CONVENIENCE OUTLET
E35	460 VAC GROUND DETECTOR
E36	OVERHEAD BAY LIGHT
E37	AUXILIARY POWER UNIT (APU)
E38	APU AIR INTAKE FILTER
E39	APU JUNCTION BOX
E40	APU EXCITER - REGULATOR
E41	WAYSIDE RADIO ANTENNA AND SWITCHING ASSEMBLY
E42	120 VAC CONVENIENCE OUTLET
E43	WAYSIDE RADIO
E44	SPIKE FILTER
E45	SPEEDOMETER CONVERTER
E46	TURBINE GOVERNOR CONTROLLER
E47	OVERHEAD BAY LIGHT
E48	COUPLER JUNCTION BOX "A"
E49	NOSE DOOR MECHANISM
E50	ELECTRICAL CONNECTOR (AUTOMATIC COUPLER)
E51	TIMER AND PUMP/MOTOR ASSEMBLY
E52	WATER HEAT THERMOSTAT SWITCH
E53	IMMERSION WATER HEATER

FIRE PROTECTION EQUIPMENT

FC1	FIRE EXTINGUISHER (10 LB.)
FC2	FIRE EXTINGUISHER (27 LB.)
FC3	EMERGENCY FIRE PULL HANDLE (FUELING)
FC4	FIRE DETECTOR SWITCH BOX (ENGINE BAY NO. 3)
FC5	FIRE DETECTOR SWITCH BOX (CENTER TUNNEL PDC)
FC6	FIRE DETECTOR SWITCH BOX (APU BAY)

WATER EQUIPMENT

W1	WATER FILLING STATION
W2	WATER HEATER (FOOD SERVICE AND GALLEY BAR)
W3	HOT WATER HEATER SHUTOFF VALVE
W4	WATER TANK
W5	AUTOMATIC DRAIN VALVE
W6	MANUAL DRAIN VALVE
W7	HOT WATER HEATER
W8	WATER COOLER
W9	WATER DISPENSER
W10	HOT WATER HEATER SHUTOFF VALVE
W11	WATER SUPPLY SHUTOFF VALVE
W12	WATER COOLER SHUTOFF VALVE

PDC EQUIPMENT LOCATION

LEFT-HAND VIEW

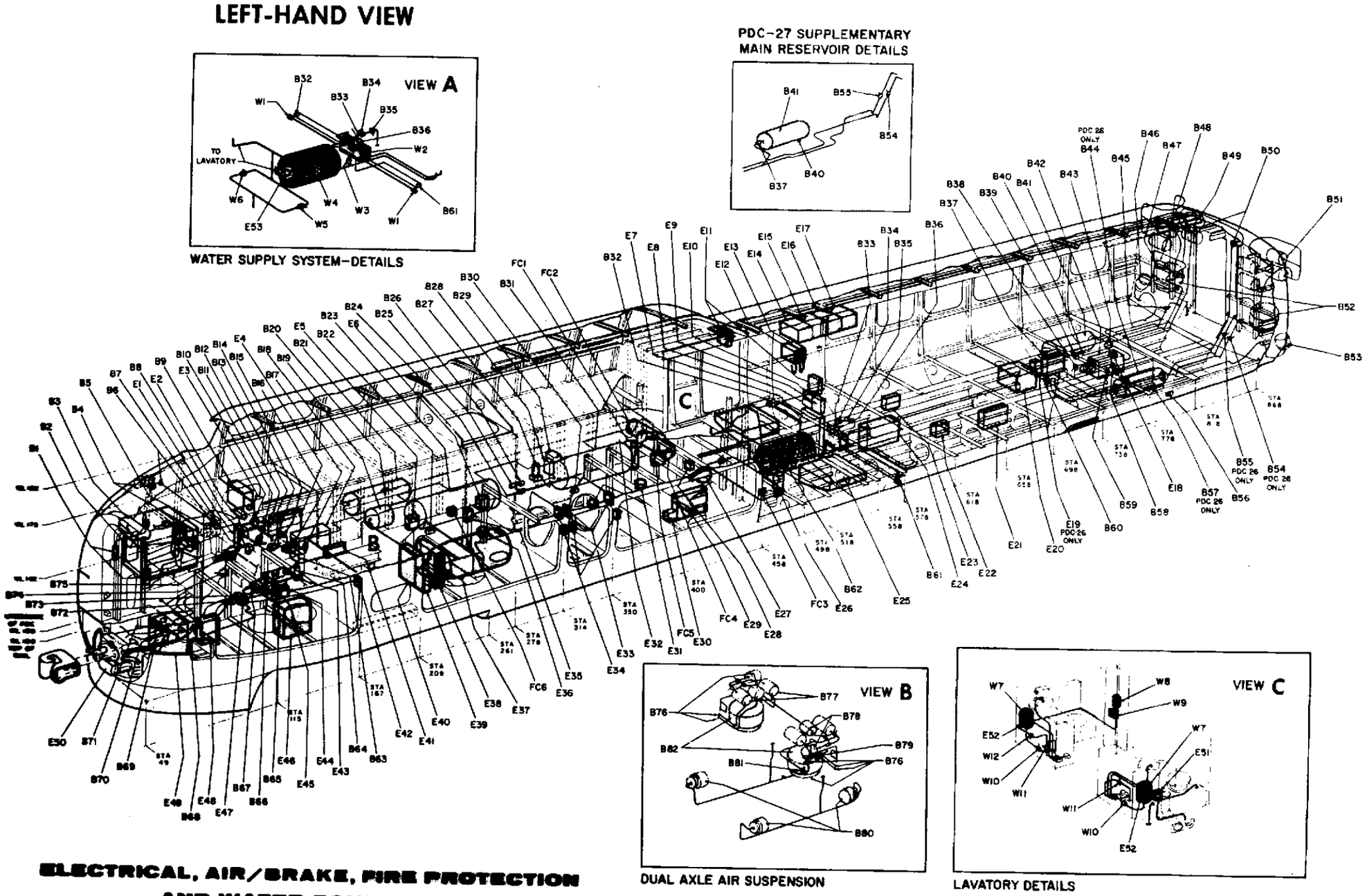

ELECTRICAL, AIR/BRAKE, FIRE PROTECTION AND WATER EQUIPMENT

FIGURE 3

LEGEND FOR FIGURE 4

ELECTRICAL EQUIPMENT

E1	TIME DELAY RELAY (D.C. POWER SUPPLY)
E2	SPEED RECORDER TERMINAL BOX
E3	SPEED RECORDER CONTROL BOX
E4	TRACTION TURBINE SEQUENCE BOX
E5	APU CONTROL BOX
E6	TERMINAL BLOCK (BRAKE CONTROL UNIT)
E7	COMPRESSOR SYNCHRONIZER
E8	ALERTOR CONTROL BOX
E9	ALERTOR JUNCTION BOX
E10	ANTENNA TUNING BOX (WAYSIDE RADIO)
E11	MASTER RELAY PANEL
E12	D.C. RECTIFIER (PDC-27 ONLY)
E13	WINDSHIELD WIPER RESISTOR ASSEMBLY
E14	HEADLIGHT RESISTOR ASSEMBLY
E15	JUNCTION BOX
E16	INDICATOR LIGHT RESISTOR ASSEMBLY
E17	THERMOSTAT CONTROL
E18	6 KVA TRANSFORMER
E19	AIR CONDITIONING CONTACTOR PANEL
E20	NOSE DOOR MECHANISM
E21	COUPLER JUNCTION BOX "B"
E22	SPEED CONVERTER ASSEMBLY
E23	SPEED CONVERTER TAP SWITCH
E24	AIR COMPRESSOR
E25	ANTI-SPIN AND SLIDE CONTROL UNIT POWER SUPPLY
E26	ANTI-SPIN AND SLIDE CONTROL UNIT
E27	BATTERY AND BATTERY BOX
E28	120 VAC CONVENIENCE OUTLET
E29	BAY LIGHTING SWITCH
E30	TERMINAL BLOCK (BRAKE CONTROL UNIT)
E31	28 VDC CIRCUIT BREAKER PANEL NO. 1
E32	WAYSIDE POWER RECEPTACLES
E33	SOFT-START RESISTOR BOX
E34	ENGINE STC-1 START/STOP CONTROL PANEL
E35	AIR FILTRATE BLOWER AND MOTOR
E36	TURBINE INPUT POWER JUNCTION BOX
E37	JUNCTION BOX "B"
E38	120 VAC CONVENIENCE OUTLETS
E39	BAY LIGHTING SWITCH
E40	120 VAC POWER SUPPLY INPUT
E41	SPEED RECORDER (PDC-26 ONLY)
E42	D.C. RECTIFIER (PDC-26 ONLY)
E43	D.C. POWER SUPPLY CONTROL BOX (PDC-26 ONLY)
E44	ENGINE STC-1 START/STOP CONTROL PANEL (PDC-27 ONLY)
E45	SOFT-START RESISTOR BOX (PDC-27 ONLY)
E46	AIR FILTER BLOWER AND MOTOR (PDC-27 ONLY)

FIRE CONTROL EQUIPMENT

FC1	FIRE DETECTOR SWITCH BOX (ENGINE BAY NO. 2)
FC2	FIRE DETECTOR SWITCH BOX (ENGINE BAY NO. 1)
FC3	FIRE DETECTOR SWITCH BOX (COMPRESSOR BAY)

PDC EQUIPMENT LOCATION

RIGHT-HAND VIEW

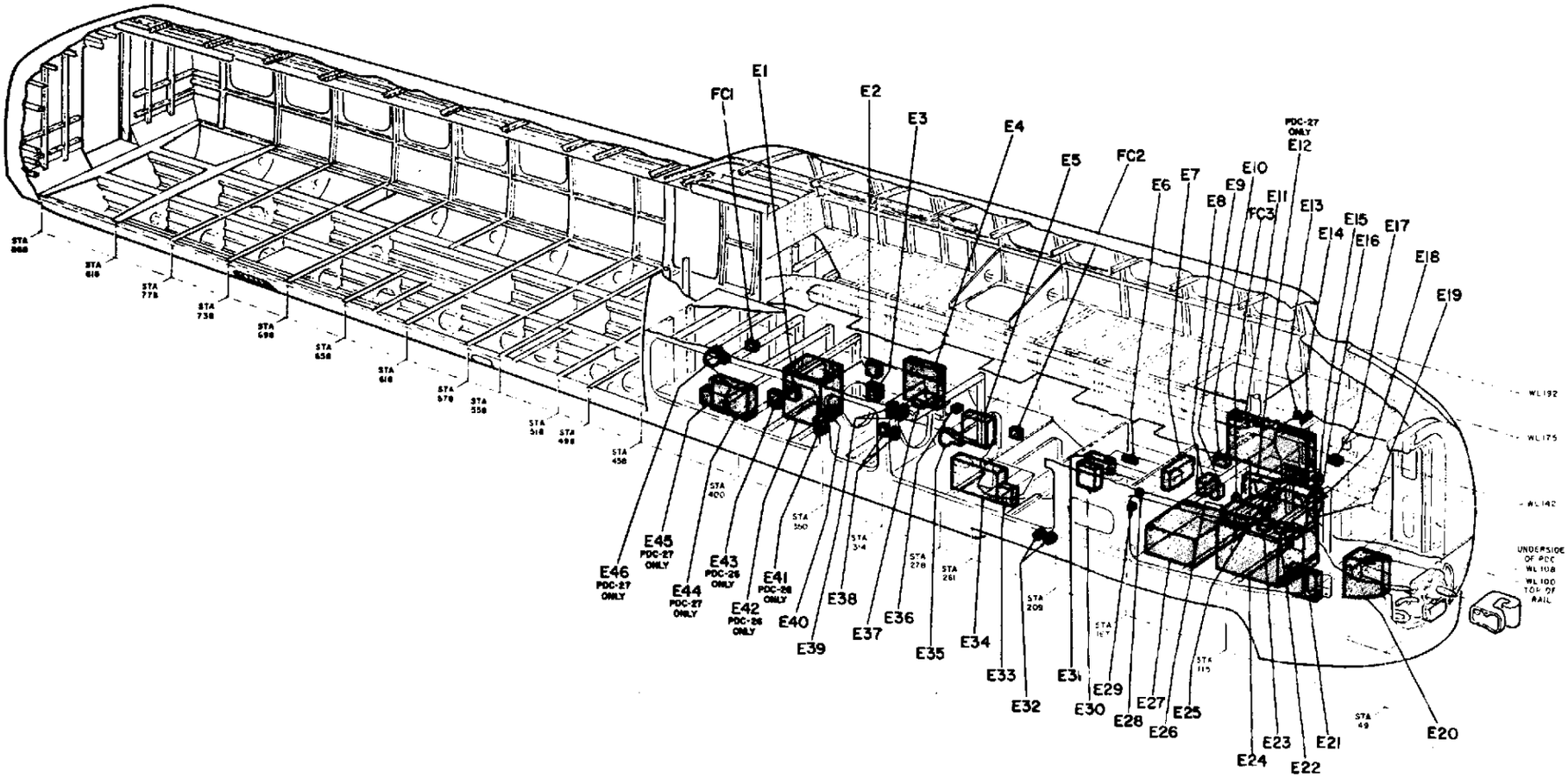

ELECTRICAL AND FIRE PROTECTION EQUIPMENT

FIGURE 4

LEGEND FOR FIGURE 5

PDC EQUIPMENT

C1	HEATING ELEMENT
C2	WINDSHIELD HEATING ELEMENT
C3	EVAPORATOR
C4	WINDSHIELD BLOWER DUCT
C5	WINDSHIELD BLOWER
C6	WINDSHIELD BLOWER DUCT
C7	WINDSHIELD HEATING ELEMENT
C8	EXHAUST DUCT
C9	PLENUM
C10	THERMOSTAT
C11	HEATING ELEMENT
C12	EVAPORATOR
C13	FRESH AIR DUCT
C14	EXHAUST DUCT
C15	AIR SUPPLY CHANNEL
C16	EXHAUST BLOWER
C17	HEATING STRIPS
C18	EXHAUST DUCT
C19	AIR INTAKE DUCT
C20	AIR CONDITIONING CONDENSER
C21	AIR CONDITIONING CONTACTOR PANEL
C22	REFRIGERANT LINES
C23	LAVATORY EXHAUST BLOWER (PDC–27 ONLY)
C24	LAVATORY EXHAUST BLOWER
C25	EXHAUST DUCT
C26	AIR CONDITIONING CONTACTOR PANEL
C27	AIR CONDITIONING CONDENSER
C28	HEATING ELEMENT
C29	EVAPORATOR
C30	THERMOSTAT

IC EQUIPMENT

C31	EXHAUST DUCT
C32	AIR SUPPLY CHANNEL
C33	EVAPORATOR
C34	HEATING ELEMENT
C35	THERMOSTAT
C36	HEATING ELEMENT
C37	AIR SUPPLY CHANNEL
C38	EXHAUST DUCT
C39	EXHAUST BLOWER
C40	EXHAUST DUCT
C41	HEATING STRIPS
C42	AIR CONDITIONING CONDENSER
C43	AIR INTAKE DUCT
C44	AIR CONDITIONING CONTACTOR PANEL
C45	EVAPORATOR
C46	REFRIGERANT LINES
C47	FRESH AIR DUCT
C48	LAVATORY EXHAUST BLOWER (IC-33 and IC–34 ONLY)
C49	LAVATORY EXHAUST BLOWER
C50	REFRIGERANT LINES
C51	FRESH AIR INTAKE
C52	AIR INTAKE DUCTS
C53	AIR CONDITIONING CONDENSER
C54	EXHAUST DUCT
C55	EXHAUST BLOWER

CLIMATIC CONTROL SYSTEM

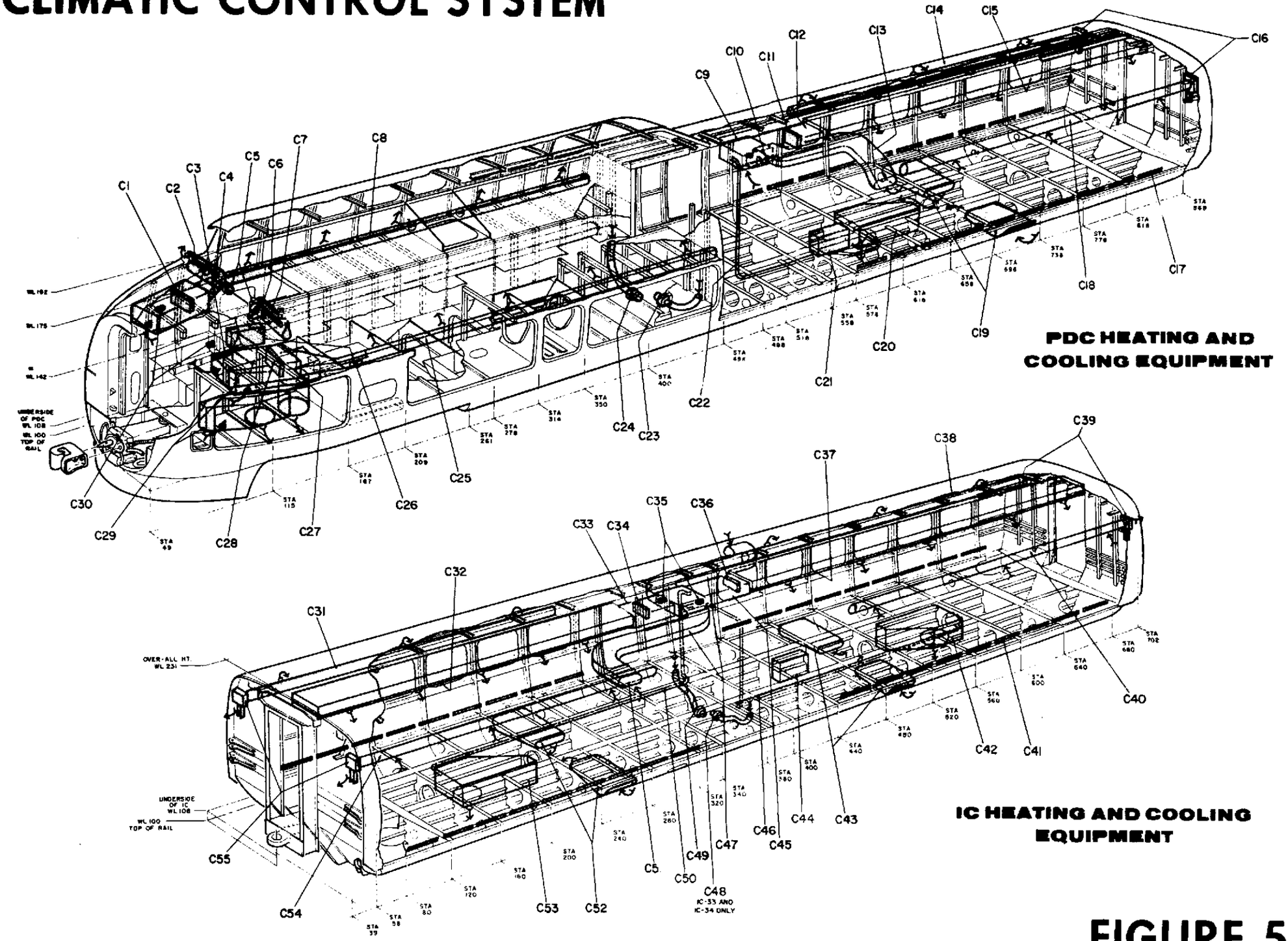

FIGURE 5

LEGEND FOR FIGURE 6

IC-33 COACH EQUIPMENT

A	TERMINAL BOX (INTERCAR JUMPER CABLES)
B	INTERMEDIATE DIAPHRAGM
C	HAND LUGGAGE RACK
D	DELUXE SEAT (TYPICAL FRONT COACH)
E	VALET COMPARTMENT
F	BAGGAGE COMPARTMENT
G	CREW AND FOOD SERVICE COMMUNICATION STATION
H	FIRST LAVATORY AREA
I	CAR IDENTIFICATION SIGN
J	DELUXE SEAT (TYPICAL REAR COACH)
K	INNER DIAPHRAGM
L	COACH WINDOW (TYPICAL)
M	AIR INTAKE GRILLE (REAR COACH AIR CONDITIONING CONDENSER)
N	SECOND LAVATORY AREA
O	TOILET DRAIN AND REFILL STATION
P	PASSENGER STEPS (EXTENDED POSITION)
Q	GALLEY AND BAR
R	WATER FILLING STATION
S	AIR INTAKE GRILLE (FRONT COACH AIR CONDITIONING CONDENSER)

SINGLE-AXLE TRUCK AND SUSPENSION EQUIPMENT

S1	BRAKE SHOE
S2	WALKING BEAM
S3	VERTICAL STRUT
S4	DAMPING RESERVOIR
S5	AIR SPRING
S6	YAW DAMPER
S7	GUIDANCE ARM
S8	TORSION SPRING "A" FRAME
S9	BRAKE CYLINDER
S10	BRAKE ACTUATOR
S11	TORSION SPRING
S12	LOWER LATERAL ARM
S13	YAW DAMPER ARM
S14	UPPER LATERAL ARM
S15	BOLSTER TIE ROD
S16	WHEEL BEARING HOUSING
S17	WHEEL

IC EQUIPMENT LOCATION

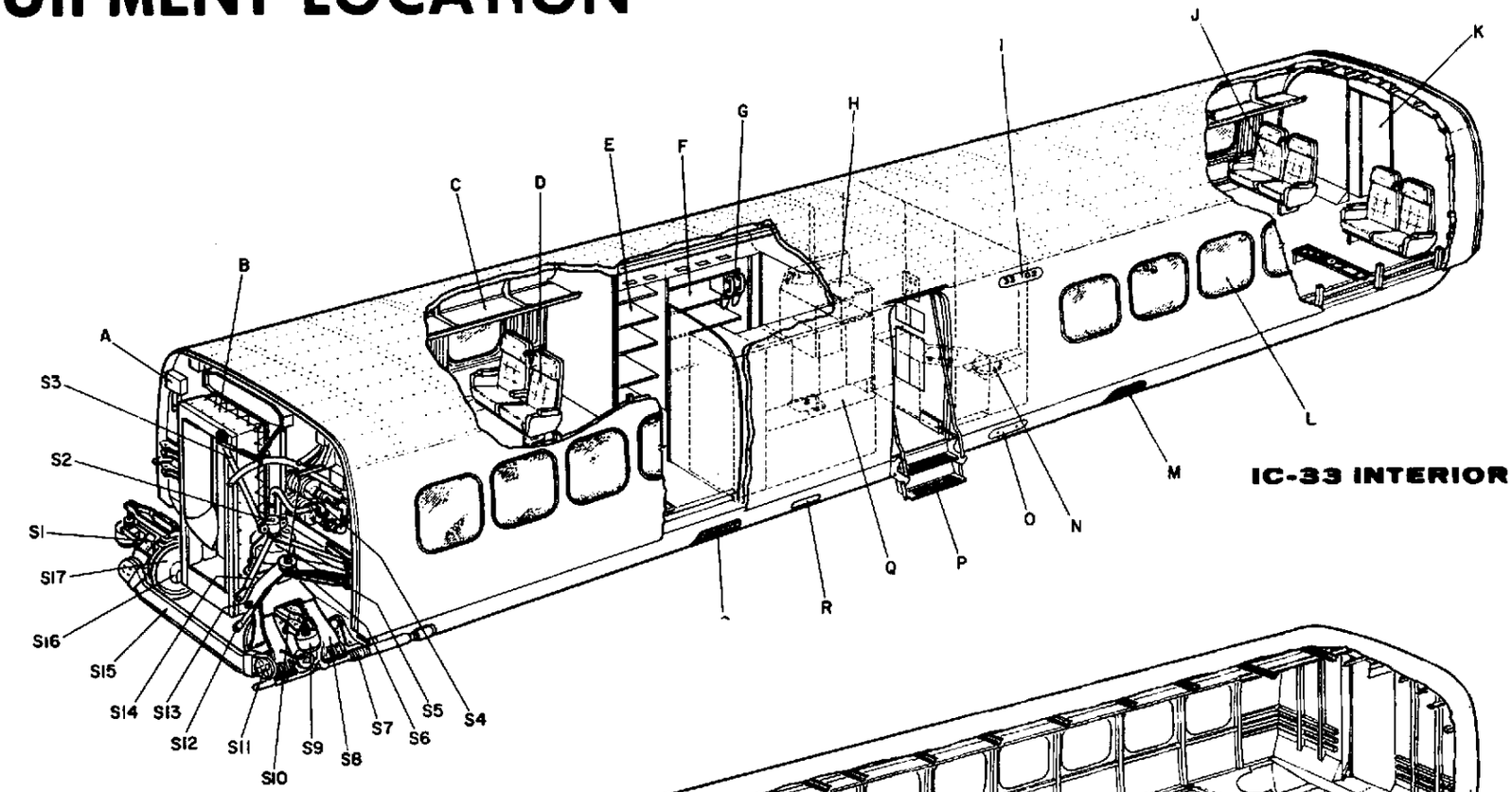

IC-33 INTERIOR VIEW

SINGLE-AXLE TRUCK AND SUSPENSION EQUIPMENT

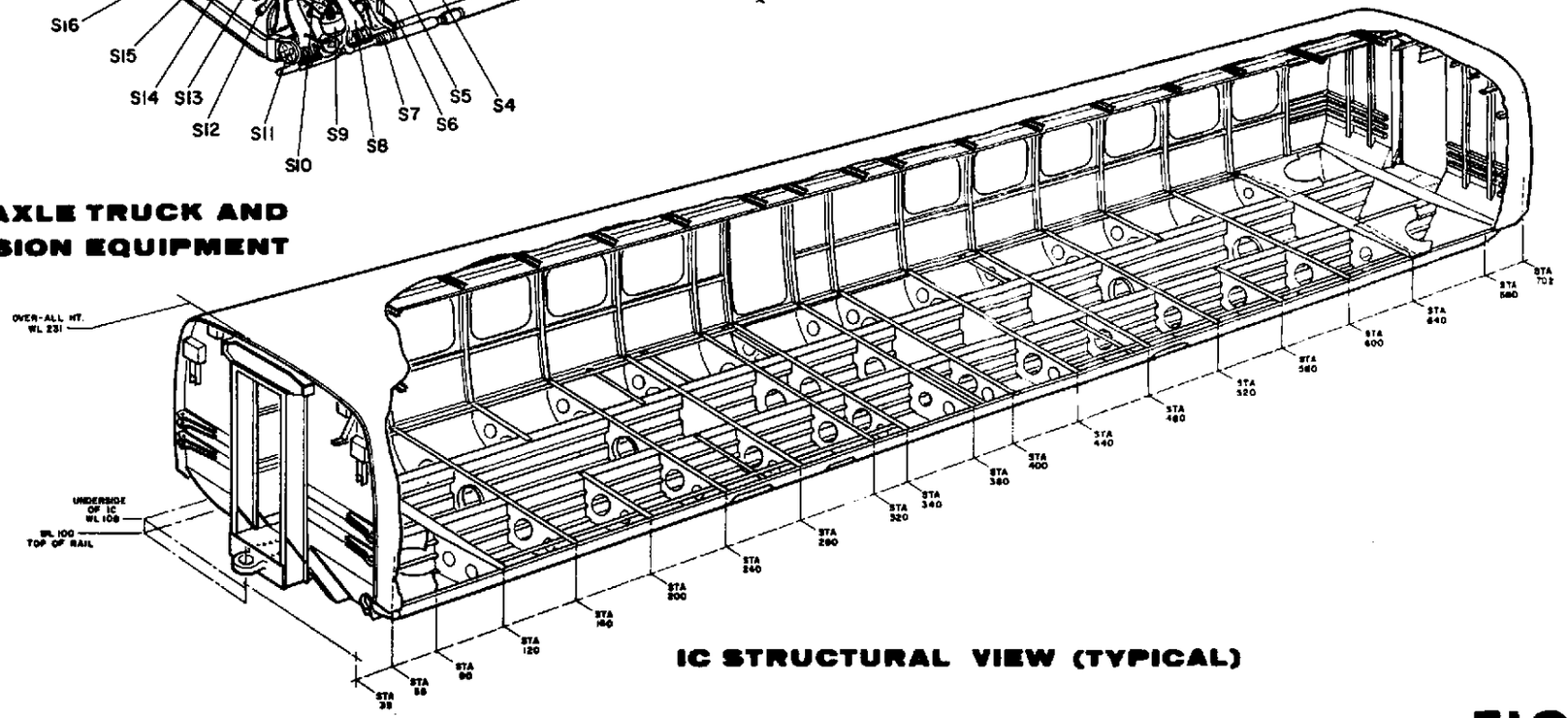

IC STRUCTURAL VIEW (TYPICAL)

FIGURE 6

LEGEND FOR FIGURE 7

AIR/BRAKE EQUIPMENT

B1	WATER RAISING SYSTEM AIR CUTOUT COCK
B2	WATER RAISING SYSTEM AIR PRESSURE LIMITING VALVE
B3	WATER RAISING SYSTEM AIR CUTOUT COCK
B4	BRAKE PIPE DIRT COLLECTOR
B5	CHECK VALVE (SUPPLEMENTARY MAIN RESERVOIR)
B6	SUPPLEMENTARY MAIN RESERVOIR
B7	SLIDE CONTROL GOVERNOR
B8	DRAIN VALVE (SUPPLEMENTARY MAIN RESERVOIR)
B9	ELECTROPNEUMATIC BRAKE UNIT (SINGLE-AXLE)
B10	EPU MAIN RESERVOIR CUTOUT COCK
B11	AIR SUSPENSION CUTOUT COCK
B12	AIR SUSPENSION PRESSURE/EPU SIGNAL CAPACITY RESERVOIR
B13	INTERCAR MAIN RESERVOIR PIPE CUTOUT COCK
B14	INTERCAR BRAKE PIPE CUTOUT COCK
B15	EPU BRAKE VALVE MANUAL RELEASE HANDLE
B16	AUXILIARY RESERVOIR
B17	DRAIN VALVE (AUXILIARY RESERVOIR)
B18	BRAKE CYLINDER CUTOUT COCK
B19	EPU BRAKE PIPE CUTOUT COCK
B20	BRAKE CYLINDER PRESSURE SWITCH
B21	PASSENGER'S/CONDUCTOR'S EMERGENCY VALVE
B22	WATER RAISING SYSTEM AIR PRESSURE SAFETY VALVE
B23	DRAIN VALVE (SUPPLEMENTARY MAIN RESERVOIR)
B24	SUPPLEMENTARY MAIN RESERVOIR
B25	INTERCAR MAIN RESERVOIR PIPE CUTOUT COCK
B26	INTERCAR BRAKE PIPE CUTOUT COCK

ELECTRICAL EQUIPMENT

E1	5 KVA TRANSFORMER
E2	1/2 HP REFRIGERATOR COMPRESSOR (IC-33 ONLY)
E3	DOOR AND STEP CONTROL ASSEMBLY
E4	460 VAC CIRCUIT BREAKER PANEL NO. 2
E5	28 VAC CIRCUIT BREAKER PANEL NO. 3
E6	28 VDC CIRCUIT BREAKER PANEL NO. 1
E7	CREW AND FOOD SERVICE COMMUNICATION STATION
E8	120 VAC CIRCUIT BREAKER PANEL NO. 4
E9	DOOR CONTROL PANEL
E10	DOOR AND STEP WARNING BELL
E11	WATER TANK IMMERSION HEATER
E12	AIR CONDITIONING CONTACTOR PANEL
E13	TERMINAL BLOCK (BRAKE CONTROL UNIT)
E14	RELAY (BRAKES ON-OFF LIGHTS)
E15	ANTI-SPIN AND SLIDE UNITS
E16	TIME DELAY RELAY
E17	9 KVA TRANSFORMER
E18	1.5 KVA TRANSFORMER
E19	JUNCTION BOX (DOOR AND STEP CONTROL)
E20	AIR CONDITIONING CONTACTOR PANEL
E21	HOT WATER THERMOSTAT SWITCH (LAVATORY)

WATER EQUIPMENT

W1	WATER FILLING STATION
W2	WATER TANK
W3	OUTLET TO LAVATORY
W4	MANUAL DUMP VALVE
W5	AUTOMATIC DUMP VALVE
W6	HOT WATER OUTLET TO GALLEY/BAR
W7	HOT WATER HEATER (GALLEY/BAR)
W8	HOT WATER HEATER (LAVATORY)
W9	WATER COOLER (DRINKING WATER)
W10	WATER DISPENSER (DRINKING WATER)
W11	WATER SUPPLY SHUTOFF VALVE (LAVATORY)
W12	HOT WATER HEATER SHUTOFF VALVE (LAVATORY)
W13	WATER COOLER SHUTOFF VALVE

IC EQUIPMENT LOCATION

IC-33

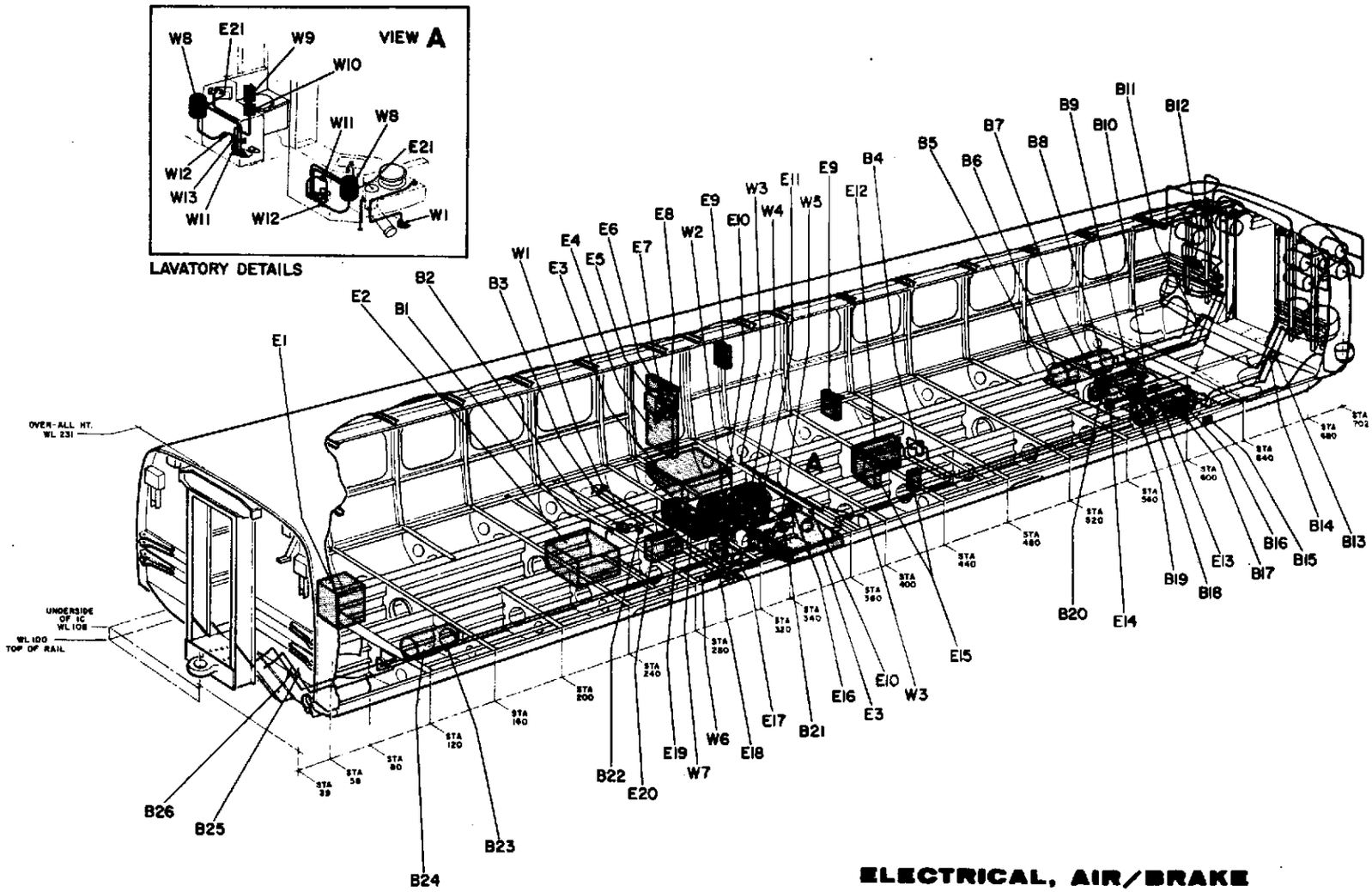

ELECTRICAL, AIR/BRAKE AND WATER EQUIPMENT

FIGURE 7

LEGEND FOR FIGURE 8

IC-35 AND IC-30 COACH EQUIPMENT

A	INNER DIAPHRAGM (FRONT)
B	TERMINAL BOX (INTERCAR JUMPER CABLES)
C	INTERMEDIATE DIAPHRAGM (FRONT)
D	HAND LUGGAGE RACK
E	COACH SEAT (TYPICAL FRONT)
F	LAVATORY AREA
G	SAFETY LOCKER
H	CAR IDENTIFICATION SIGN
I	COACH SEAT (TYPICAL REAR)
J	INNER DIAPHRAGM (REAR)
K	AIR INTAKE GRILLE (REAR COACH AIR CONDITIONING CONDENSER)
L	TOILET DRAIN AND REFILL STATION
M	BAGGAGE COMPARTMENT
N	PASSENGER STEPS (RETRACTED POSITION)
O	WATER FILLING STATION
P	AIR INTAKE GRILLE (FRONT COACH AIR CONDITIONING CONDENSER)
Q	COACH WINDOW (TYPICAL)
R	SINGLE-AXLE TRUCK AND SUSPENSION EQUIPMENT (SEE FIGURE 6 FOR DETAILS)

AIR/BRAKE EQUIPMENT

B1	WATER RAISING SYSTEM AIR CUTOUT COCK
B2	PASSENGER'S/CONDUCTOR'S EMERGENCY VALVE
B3	BRAKE PIPE DIRT COLLECTOR
B4	CHECK VALVE (SUPPLEMENTARY MAIN RESERVOIR)
B5	SLIDE CONTROL GOVERNOR
B6	DRAIN VALVE (SUPPLEMENTARY MAIN RESERVOIR)
B7	BRAKE CYLINDER PRESSURE SWITCH
B8	ELECTROPNEUMATIC BRAKE UNIT (SINGLE-AXLE)
B9	EPU MAIN RESERVOIR CUTOUT COCK
B10	AIR SUSPENSION CUTOUT COCK
B11	AIR SUSPENSION PRESSURE/EPU SIGNAL CAPACITY RESERVOIR
B12	INTERCAR MAIN RESERVOIR PIPE CUTOUT COCK
B13	INTERCAR BRAKE PIPE CUTOUT COCK
B14	AUXILIARY RESERVOIR
B15	EPU BRAKE VALVE MANUAL RELEASE HANDLE
B16	DRAIN VALVE (AUXILIARY RESERVOIR)
B17	BRAKE CYLINDER CUTOUT COCK
B18	EPU BRAKE PIPE CUTOUT COCK
B19	SUPPLEMENTARY MAIN RESERVOIR
B20	WATER RAISING SYSTEM AIR PRESSURE SAFETY VALVE
B21	WATER RAISING SYSTEM AIR PRESSURE LIMITING VALVE
B22	WATER RAISING SYSTEM AIR CUTOUT COCK
B23	DRAIN VALVE (SUPPLEMENTARY MAIN RESERVOIR)
B24	SUPPLEMENTARY MAIN RESERVOIR
B25	INTERCAR MAIN RESERVOIR PIPE CUTOUT COCK
B26	INTERCAR BRAKE PIPE CUTOUT COCK

ELECTRICAL EQUIPMENT

E1	DOOR AND STEP CONTROL ASSEMBLY
E2	CREW AND FOOD SERVICE COMMUNICATION STATION
E3	DOOR AND STEP WARNING BELL
E4	DOOR CONTROL PANEL
E5	WATER TANK IMMERSION HEATER
E6	460 VAC CIRCUIT BREAKER PANEL NO. 2
E7	120 VAC CIRCUIT BREAKER PANEL NO. 4
E8	28 VDC CIRCUIT BREAKER PANEL NO. 1
E9	28 VAC CIRCUIT BREAKER PANEL NO. 3
E10	AIR CONDITIONING CONTACTOR PANEL
E11	TERMINAL BLOCK (BRAKE CONTROL UNIT)
E12	RELAY (BRAKES ON-OFF LIGHTS)
E13	ANTI-SPIN AND SLIDE UNITS
E14	TIME DELAY RELAY
E15	1.5 KVA TRANSFORMER
E16	9 KVA TRANSFORMER
E17	JUNCTION BOX (DOOR AND STEP CONTROL)
E18	AIR CONDITIONING CONTACTOR PANEL

WATER EQUIPMENT

W1	WATER FILLING STATION
W2	OUTLET TO LAVATORY
W3	MANUAL DUMP VALVE
W4	AUTOMATIC DUMP VALVE
W5	WATER TANK

IC EQUIPMENT LOCATION

IC-35 AND IC-30

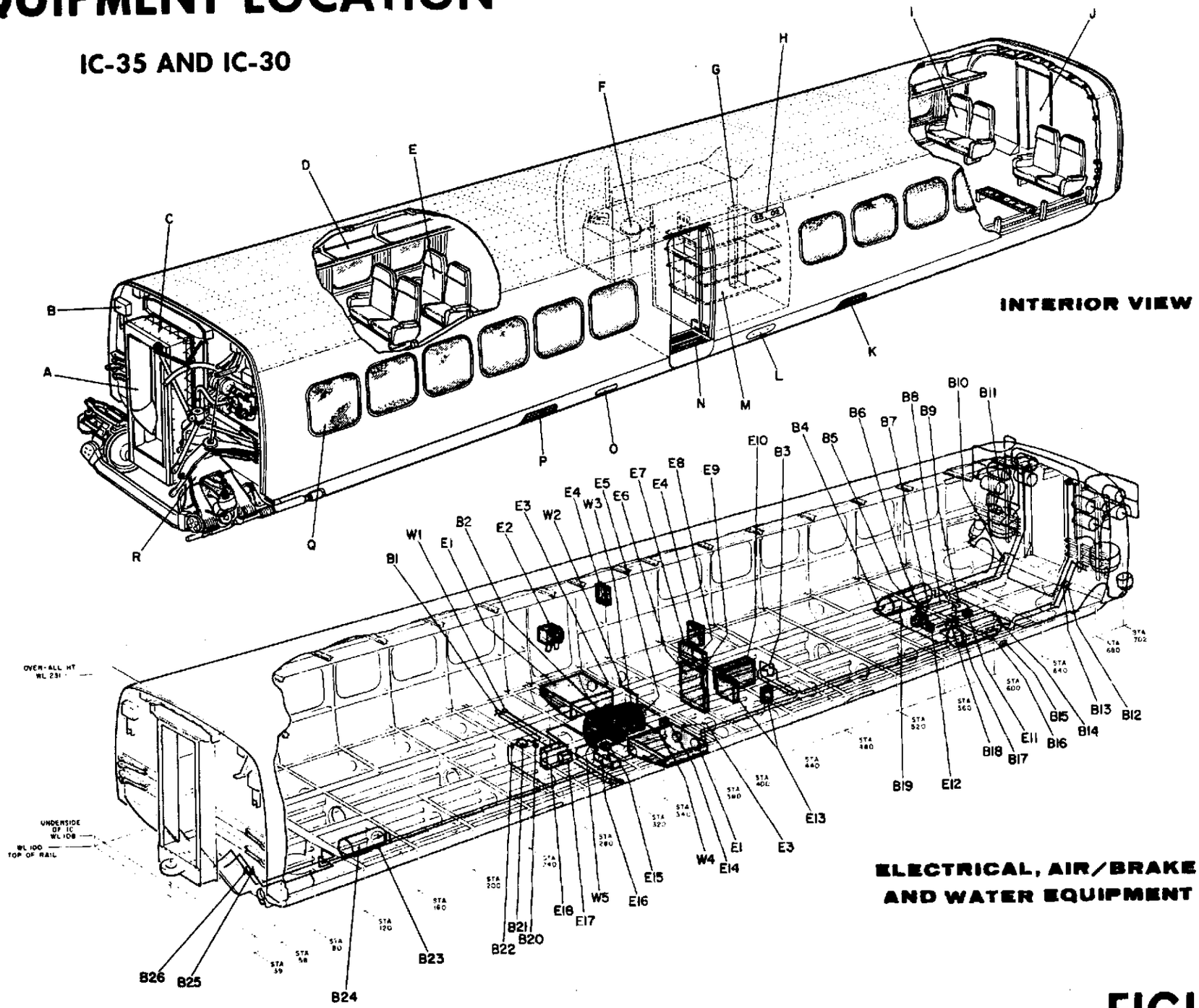

FIGURE 8

LEGEND FOR FIGURE 9

IC-34 COACH EQUIPMENT

A	INNER DIAPHRAGM (FRONT)
B	TERMINAL BOX (INTERCAR JUMPER CABLES)
C	INTERMEDIATE DIAPHRAGM (FRONT)
D	COACH SEAT (TYPICAL FRONT)
E	HAND LUGGAGE RACK
F	SAFETY LOCKER
G	BAGGAGE COMPARTMENT
H	CREW COMMUNICATION STATION
I	FIRST LAVATORY AREA
J	SECOND LAVATORY AREA
K	CAR IDENTIFICATION SIGN
L	COACH SEAT (TYPICAL REAR)
M	INNER DIAPHRAGM (REAR)
N	COACH WINDOW (TYPICAL)
O	AIR INTAKE GRILLE (REAR COACH AIR CONDITIONING CONDENSER)
P	TOILET DRAIN AND REFILL STATION
Q	PASSENGER STEPS (RETRACTED POSITION)
R	WATER FILLING STATION
S	AIR INTAKE GRILLE (FRONT COACH AIR CONDITIONING CONDENSER)
T	SINGLE-AXLE TRUCK AND SUSPENSION EQUIPMENT (SEE FIGURE 6 FOR DETAILS)

AIR/BRAKE EQUIPMENT

B1	WATER RAISING SYSTEM AIR CUTOUT COCK
B2	BRAKE PIPE DIRT COLLECTOR
B3	CHECK VALVE (SUPPLEMENTARY MAIN RESERVOIR)
B4	SUPPLEMENTARY MAIN RESERVOIR
B5	SLIDE CONTROL GOVERNOR
B6	DRAIN VALVE (SUPPLEMENTARY MAIN RESERVOIR)
B7	BRAKE CYLINDER PRESSURE SWITCH
B8	ELECTROPNEUMATIC BRAKE UNIT (SINGLE-AXLE)
B9	EPU MAIN RESERVOIR CUTOUT COCK
B10	AIR SUSPENSION CUTOUT COCK
B11	AIR SUSPENSION PRESSURE/EPU SIGNAL CAPACITY RESERVOIR
B12	INTERCAR MAIN RESERVOIR PIPE CUTOUT COCK
B13	INTERCAR BRAKE PIPE CUTOUT COCK
B14	AUXILIARY RESERVOIR
B15	DRAIN VALVE (AUXILIARY RESERVOIR)
B16	EPU BRAKE VALVE MANUAL RELEASE HANDLE
B17	BRAKE CYLINDER CUTOUT COCK
B18	EPU BRAKE PIPE CUTOUT COCK
B19	PASSENGER'S/CONDUCTOR'S EMERGENCY VALVE
B20	WATER RAISING SYSTEM AIR PRESSURE SAFETY VALVE
B21	WATER RAISING SYSTEM AIR PRESSURE LIMITING VALVE
B22	WATER RAISING SYSTEM AIR CUTOUT COCK
B23	DRAIN VALVE (SUPPLEMENTARY MAIN RESERVOIR)
B24	SUPPLEMENTARY MAIN RESERVOIR
B25	INTERCAR MAIN RESERVOIR PIPE CUTOUT COCK
B26	INTERCAR BRAKE PIPE CUTOUT COCK

ELECTRICAL EQUIPMENT

E1	DOOR AND STEP CONTROL ASSEMBLY
E2	460 VAC CIRCUIT BREAKER PANEL NO. 2
E3	28 VAC CIRCUIT BREAKER PANEL NO. 3
E4	28 VDC CIRCUIT BREAKER PANEL NO. 4
E5	120 VAC CIRCUIT BREAKER PANEL NO. 1
E6	DOOR AND STEP WARNING BELL
E7	CREW COMMUNICATION STATION
E8	DOOR CONTROL PANEL
E9	TIME DELAY RELAY
E10	AIR CONDITIONING CONTACTOR PANEL
E11	TERMINAL BLOCK (BRAKE CONTROL UNIT)
E12	RELAY (BRAKES ON-OFF LIGHTS)
E13	ANTI-SPIN AND SLIDE UNITS
E14	WATER TANK IMMERSION HEATER
E15	1.5 KVA TRANSFORMER
E16	9 KVA TRANSFORMER
E17	JUNCTION BOX (DOOR AND STEP CONTROL)
E18	AIR CONDITIONING CONTACTOR PANEL

WATER EQUIPMENT

W1	WATER FILLING STATION
W2	OUTLET TO LAVATORY
W3	MANUAL DUMP VALVE
W4	AUTOMATIC DUMP VALVE
W5	WATER TANK

IC EQUIPMENT LOCATION

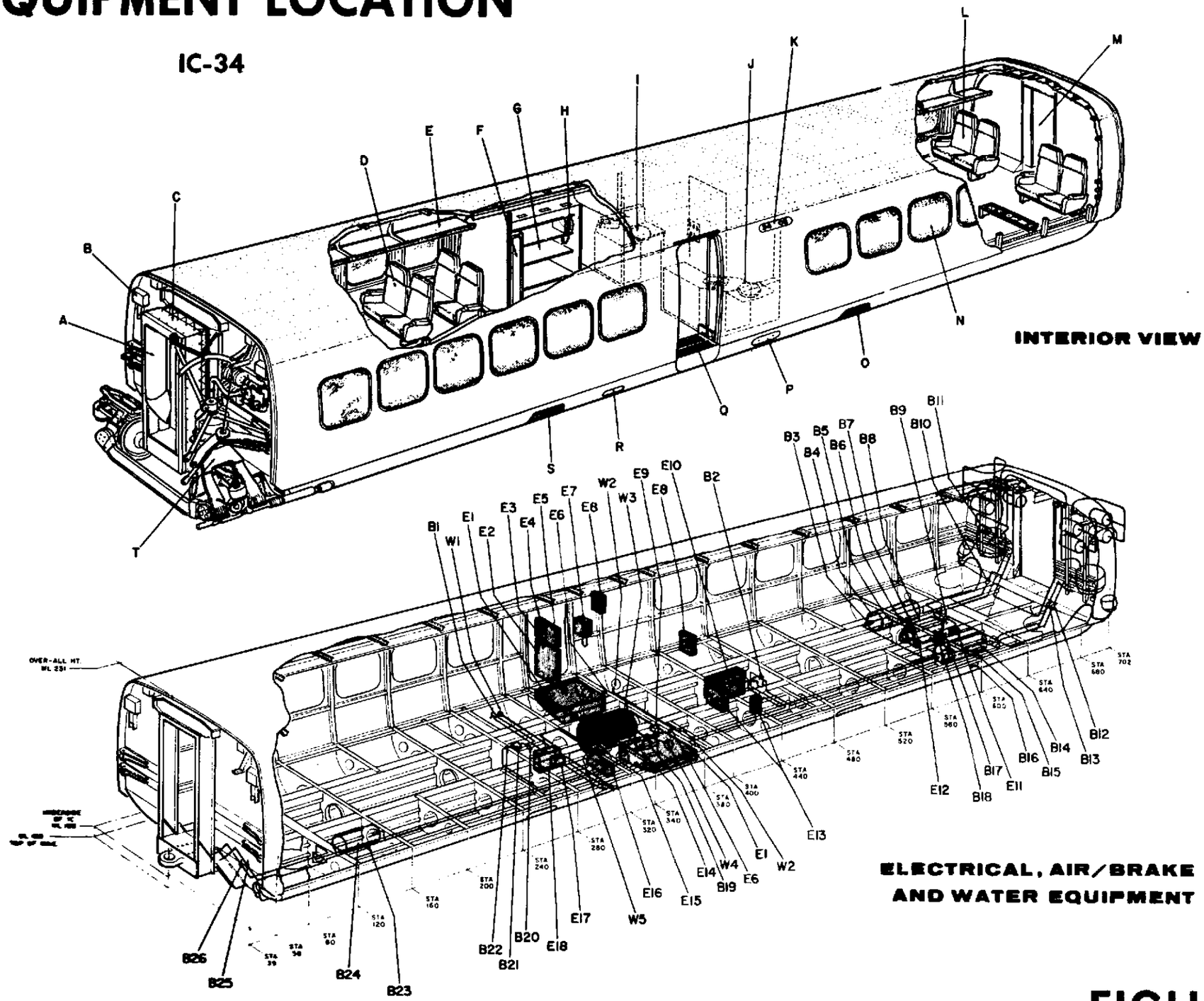

FIGURE 9

LEGEND FOR FIGURE 10

IC-31 COACH EQUIPMENT

A	INNER DIAPHRAGM (FRONT)
B	TERMINAL BOX (INTERCAR JUMPER CABLES)
C	INTERMEDIATE DIAPHRAGM (FRONT)
D	HAND LUGGAGE RACK
E	COACH SEAT (TYPICAL FRONT BUFFETERIA)
F	BUFFETERIA SIDEWALL COMPARTMENTS
G	MICROWAVE OVEN AND CONTROLS
H	FOOD SERVICE COMMUNICATION STATION
I	LAVATORY AREA
J	SAFETY LOCKER
K	CAR IDENTIFICATION SIGN
L	COACH SEAT (TYPICAL REAR BUFFETERIA)
M	INNER DIAPHRAGM (REAR)
N	COACH WINDOW (TYPICAL)
O	AIR INTAKE GRILLE (REAR COACH AIR CONDITIONING CONDENSER)
P	BAGGAGE COMPARTMENT
Q	PASSENGER STEPS (EXTENDED POSITION)
R	WATER FILLING STATION
S	BUFFETERIA SERVING COUNTER
T	AIR INTAKE GRILLE (FRONT COACH AIR CONDITIONING CONDENSER)
U	CENTER AISLE DISPLAY SHELVES
V	SINGLE-AXLE TRUCK AND SUSPENSION EQUIPMENT (SEE FIGURE 5 FOR DETAILS)

AIR/BRAKE EQUIPMENT

B1	WATER RAISING SYSTEM AIR CUTOUT COCK
B2	PASSENGER'S/CONDUCTOR'S EMERGENCY VALVE
B3	BRAKE PIPE DIRT COLLECTOR
B4	CHECK VALVE (SUPPLEMENTARY MAIN RESERVOIR)
B5	SLIDE CONTROL GOVERNOR
B6	SUPPLEMENTARY MAIN RESERVOIR
B7	DRAIN VALVE (SUPPLEMENTARY MAIN RESERVOIR)
B8	ELECTROPNEUMATIC BRAKE UNIT (SINGLE-AXLE)
B9	EPU MAIN RESERVOIR CUTOUT COCK
B10	AIR SUSPENSION CUTOUT COCK
B11	AIR SUSPENSION PRESSURE/EPU SIGNAL CAPACITY RESERVOIR
B12	INTERCAR MAIN RESERVOIR PIPE CUTOUT COCK
B13	INTERCAR BRAKE PIPE CUTOUT COCK
B14	EPU BRAKE VALVE MANUAL RELEASE HANDLE
B15	AUXILIARY RESERVOIR
B16	DRAIN VALVE (AUXILIARY RESERVOIR)
B17	BRAKE CYLINDER CUTOUT COCK
B18	EPU BRAKE PIPE CUTOUT COCK
B19	BRAKE CYLINDER PRESSURE SWITCH
B20	WATER RAISING SYSTEM AIR PRESSURE SAFETY VALVE
B21	WATER RAISING SYSTEM AIR PRESSURE LIMITING VALVE
B22	WATER RAISING SYSTEM AIR CUTOUT COCK
B23	DRAIN VALVE (SUPPLEMENTARY MAIN RESERVOIR)
B24	SUPPLEMENTARY MAIN RESERVOIR
B25	INTERCAR MAIN RESERVOIR PIPE CUTOUT COCK
B26	INTERCAR BRAKE PIPE CUTOUT COCK

ELECTRICAL EQUIPMENT

E1	5 KVA TRANSFORMER
E2	DOOR AND STEP CONTROL ASSEMBLY
E3	CREW AND FOOD SERVICE COMMUNICATION STATION
E4	DOOR AND STEP WARNING BELL
E5	DOOR CONTROL PANEL
E6	WATER TANK IMMERSION HEATER
E7	460 VAC CIRCUIT BREAKER PANEL NO. 2
E8	120 VAC CIRCUIT BREAKER PANEL NO. 4
E9	28 VDC CIRCUIT BREAKER PANEL NO. 1
E10	28 VAC CIRCUIT BREAKER PANEL NO. 3
E11	AIR CONDITIONING CONTACTOR PANEL
E12	TERMINAL BLOCK (BRAKE CONTROL UNIT)
E13	RELAY (BRAKES ON-OFF LIGHTS)
E14	ANTI-SPIN AND SLIDE UNITS
E15	TIME DELAY RELAY
E16	1.5 KVA TRANSFORMER
E17	9 KVA TRANSFORMER
E18	JUNCTION BOX (DOOR AND STEP CONTROL)
E19	AIR CONDITIONING CONTACTOR PANEL
E20	BUFFETERIA REFRIGERATOR COMPRESSOR (3/4 HP)

WATER EQUIPMENT

W1	HOT WATER OUTLET TO BUFFETERIA
W2	HOT WATER HEATER (BUFFETERIA)
W3	HOT WATER HEATER SHUTOFF VALVE
W4	WATER FILLING STATION
W5	OUTLET TO LAVATORY
W6	MANUAL DUMP VALVE
W7	AUTOMATIC DUMP VALVE
W8	WATER TANK

IC EQUIPMENT LOCATION

IC-31

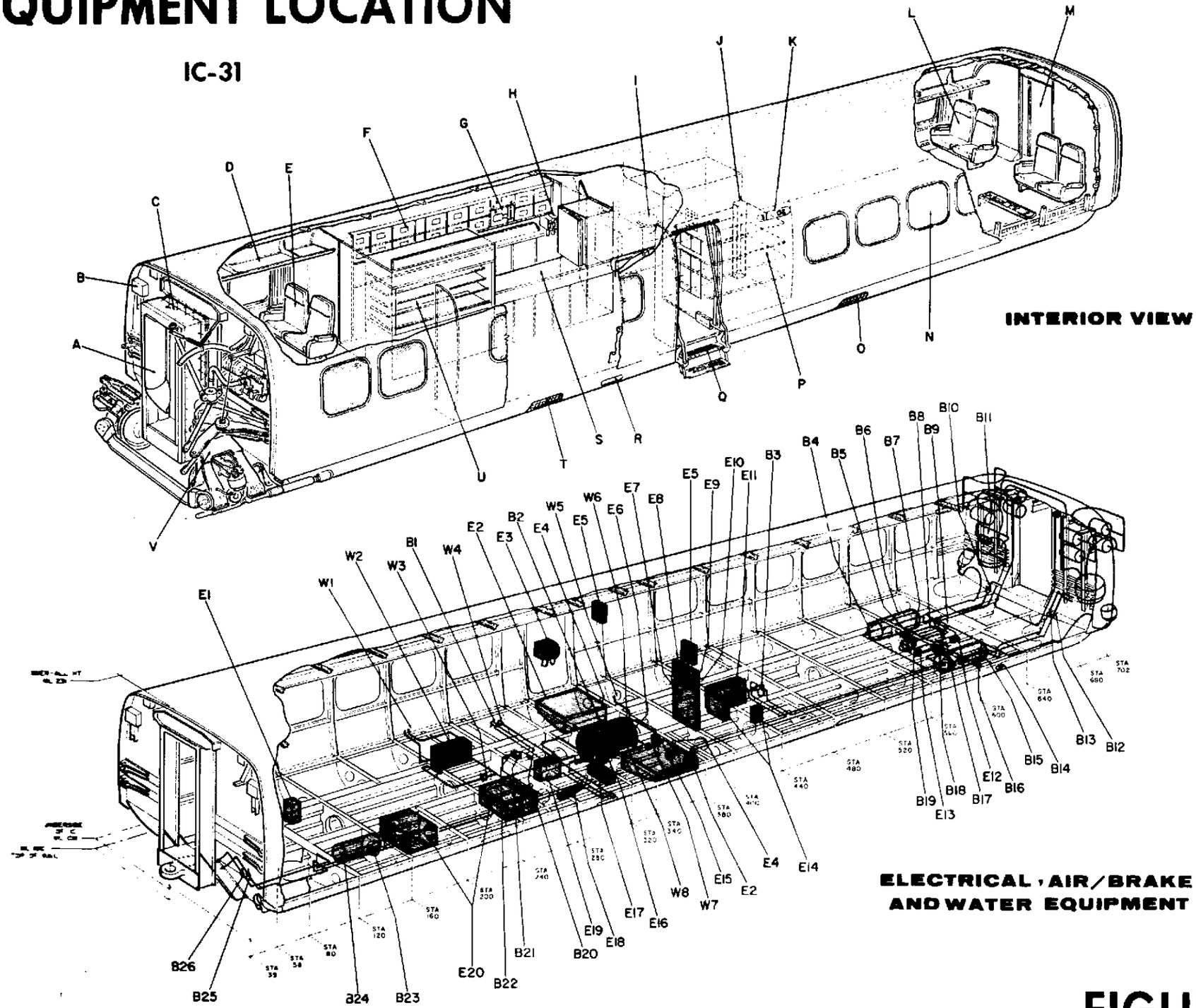

FIGURE 10